PHOTOFACT® Technical Service Data 4348

SET 4348

MODEL DS25390 (CHASSIS 25390-00)

SANYO

INDEX

GridTrace Location
- Main Board 3

High Voltage Shutdown Test 1
IC Functions 2
Important Parts Information 4
Miscellaneous Adjustments 1
Parts List 4
Placement Chart 1
Safety Precautions 1
Schematic Component Location 1
Schematic Notes 2
Schematics
- Power Supply 2
- System Control 2
- Television 2

Test Equipment 4
Tuner Information 1

For Supplier Address, See PHOTOFACT Annual Index

SANYO

Model DS25390 (Chassis 25390-00)

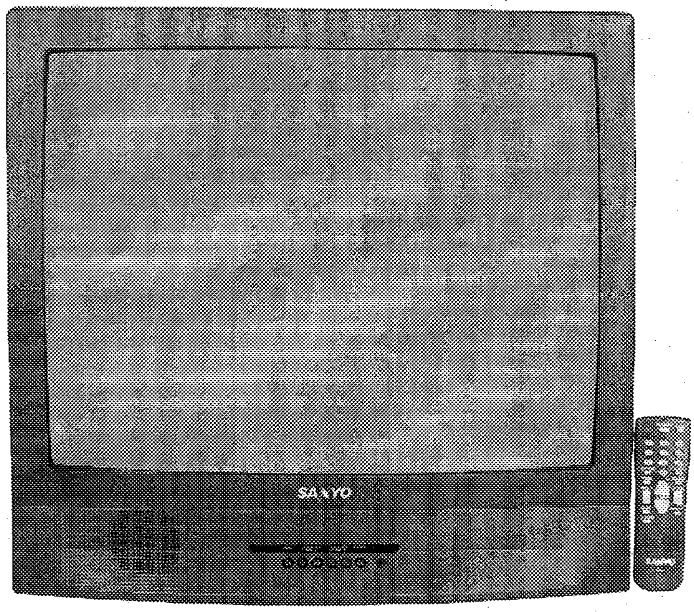

Essential coverage for servicing a television receiver...

- **Schematics**
- **Component locations**
- **Parts list**

Coverage includes these additional models and chassis:

MODELS	CHASSIS
AVM-2509C	G5E-2509C0
AVM-2509S	G5E-2509S0

SAMS™ Technical Publishing

SEPTEMBER 2000 SET 4348

A

TELEVISION S

ADDITIONAL SCHEMATIC NOTES, SEE PAGE 2F

A PHOTOFACT STANDARD NOTATION SCHEMATIC WITH CIRCUITTRACE®

© 2000 SAMS Technical Publishing

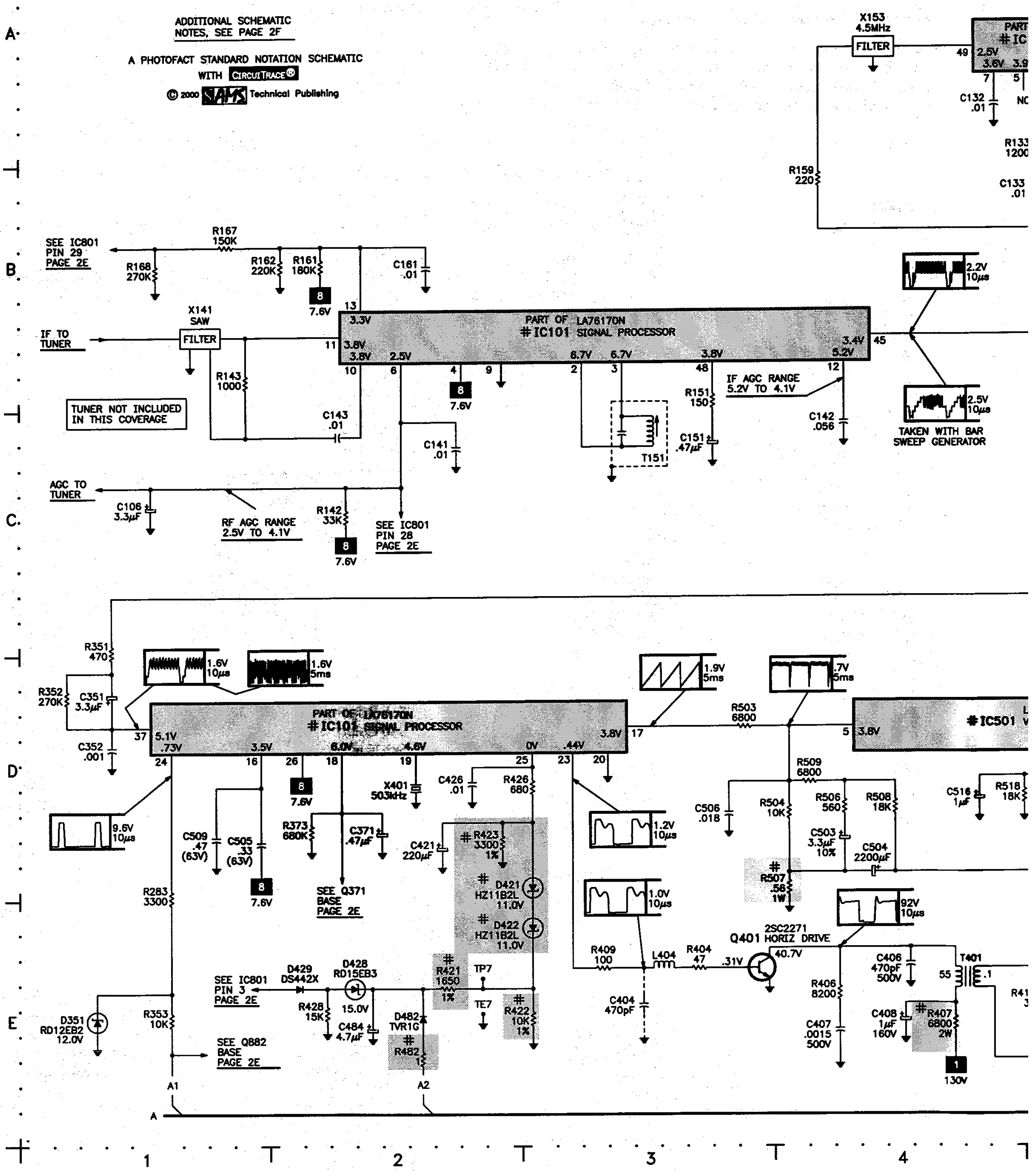

B

ON SCHEMATIC

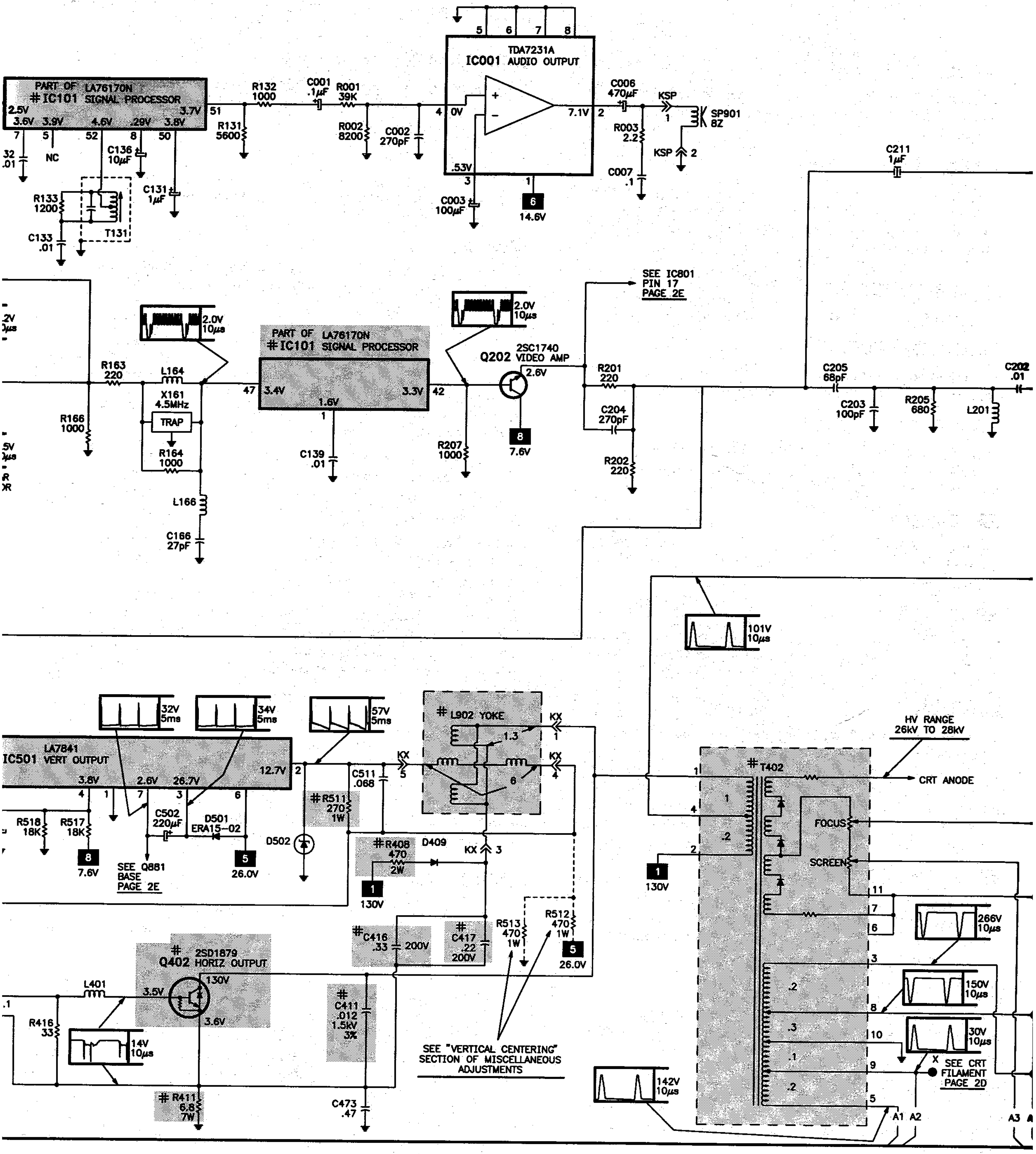

5 6 7 8

C

TELEVISION SCHEM

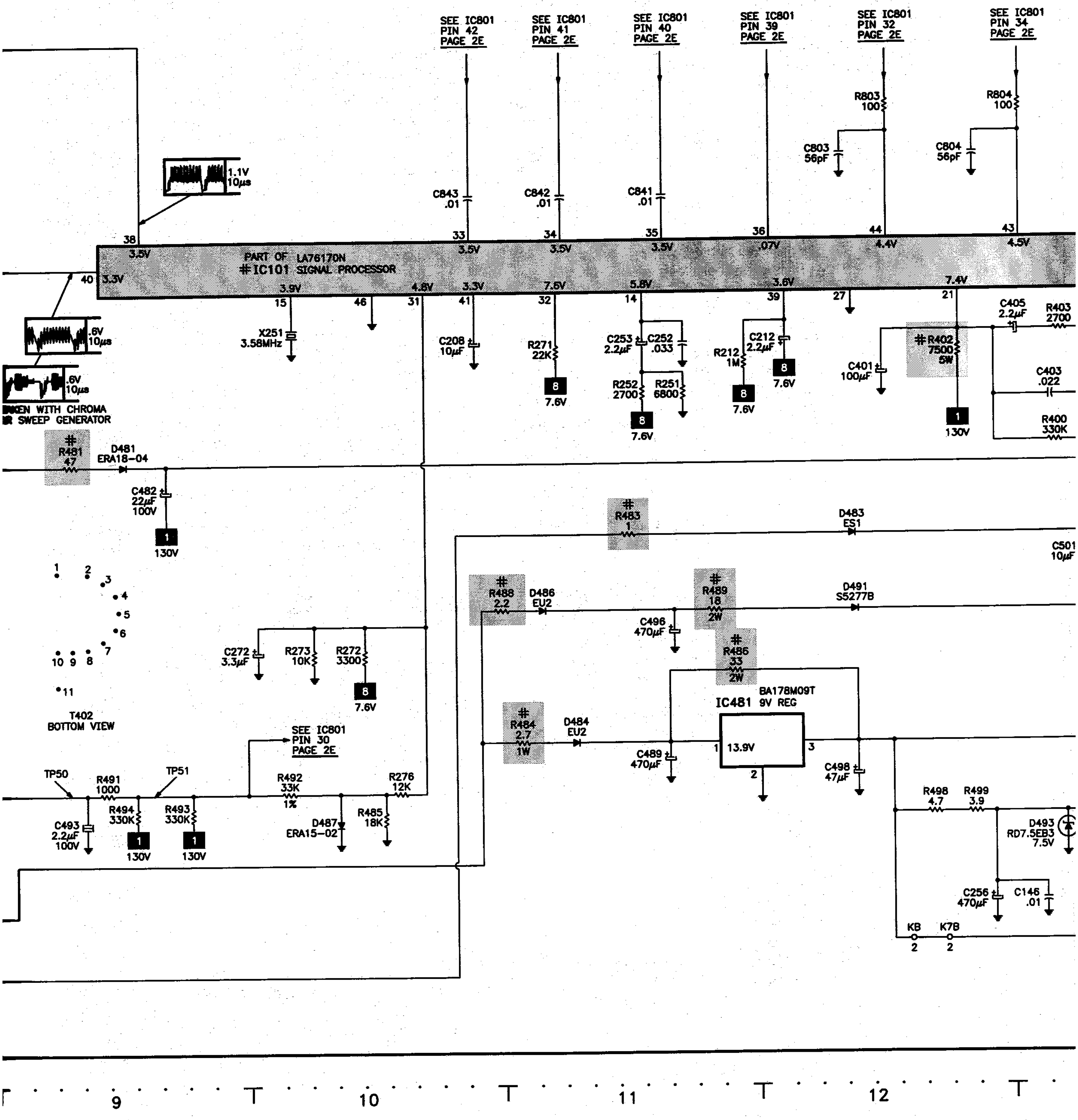

SCHEMATIC continued

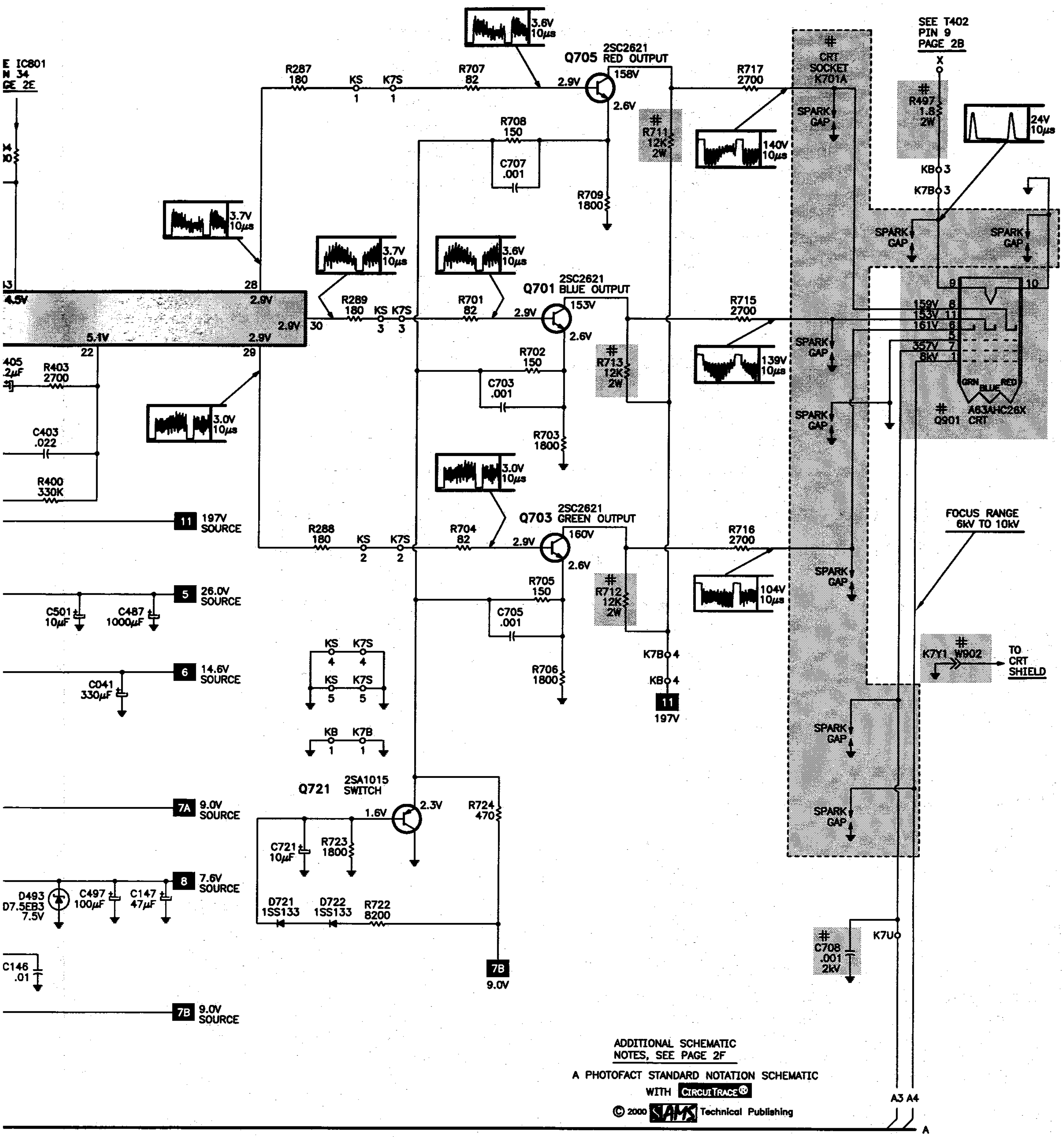

ADDITIONAL SCHEMATIC NOTES, SEE PAGE 2F

A PHOTOFACT STANDARD NOTATION SCHEMATIC WITH CircuitTrace®

© 2000 SAMS Technical Publishing

E

SYSTEM CONTR

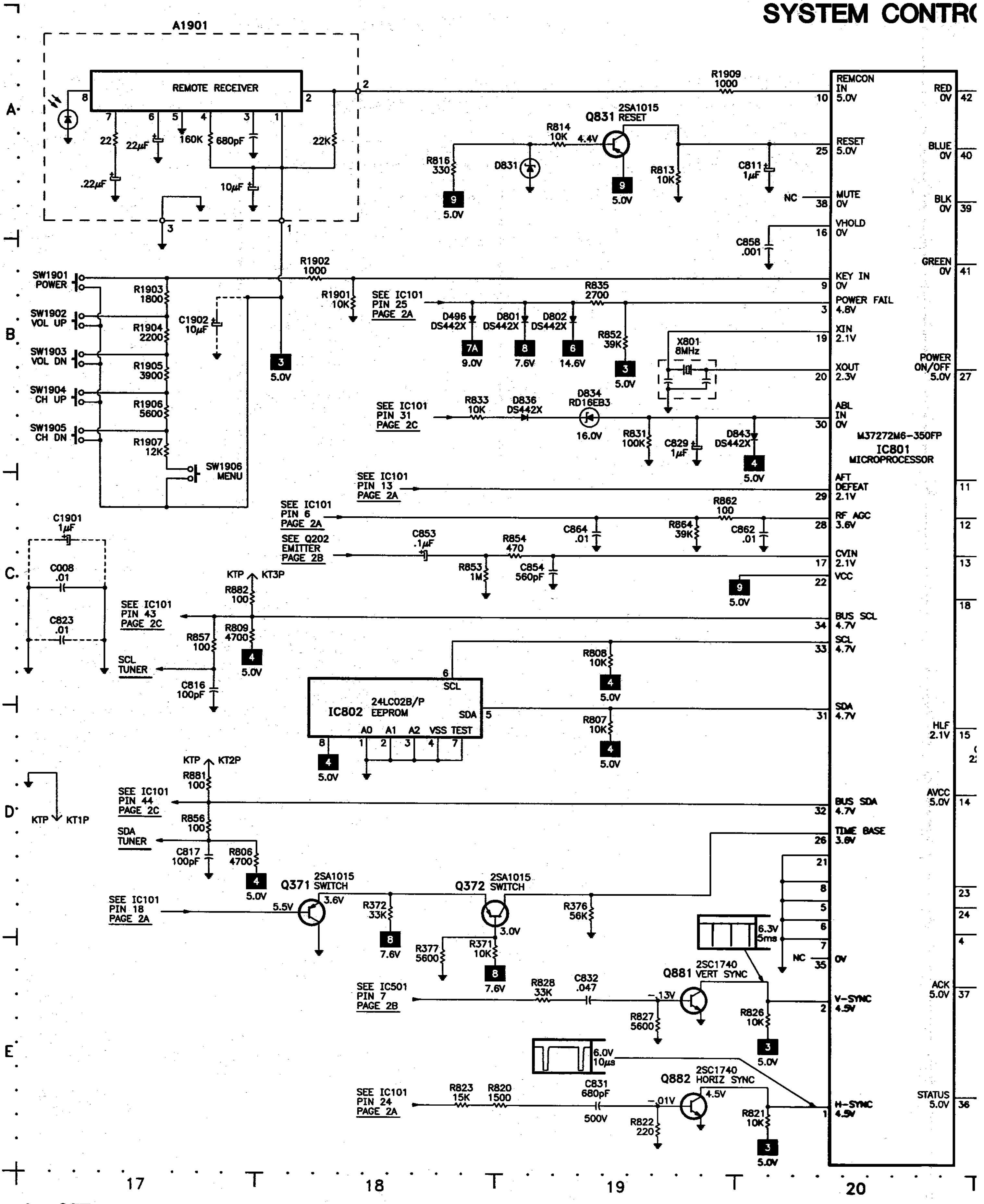

F

ITROL SCHEMATIC

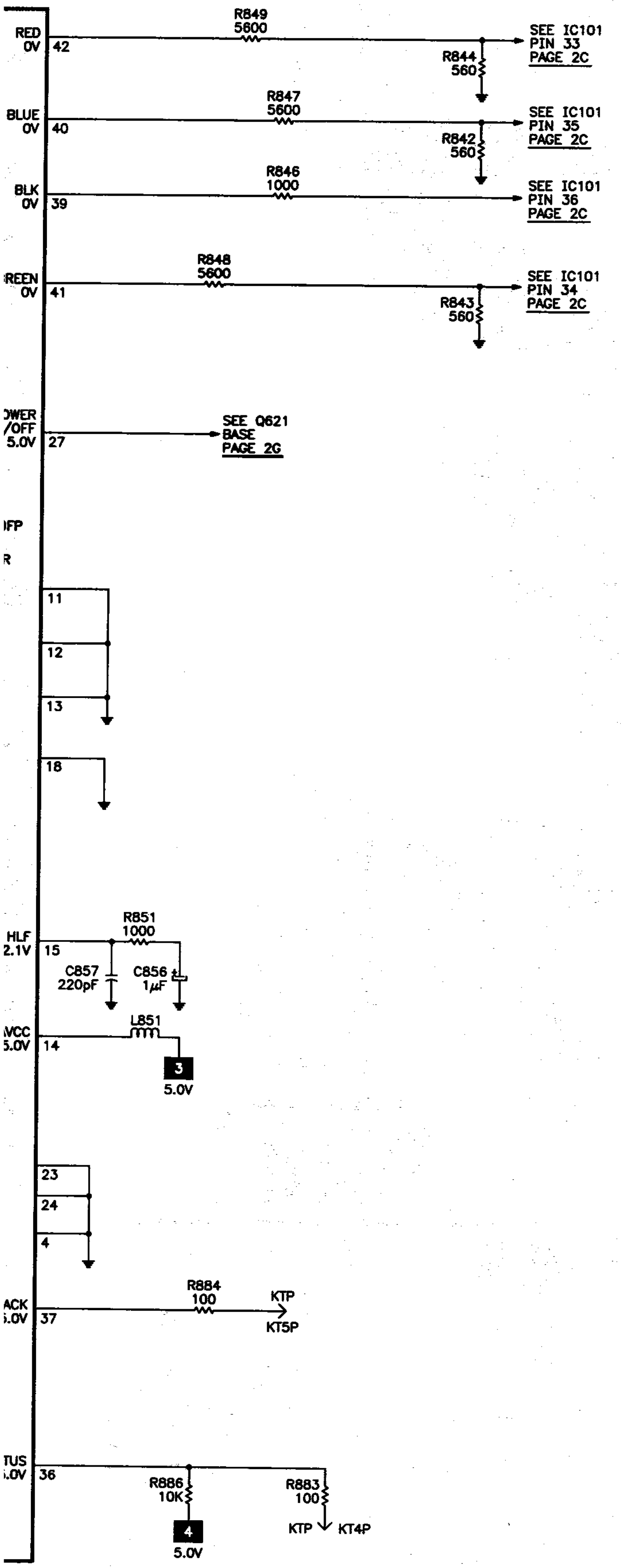

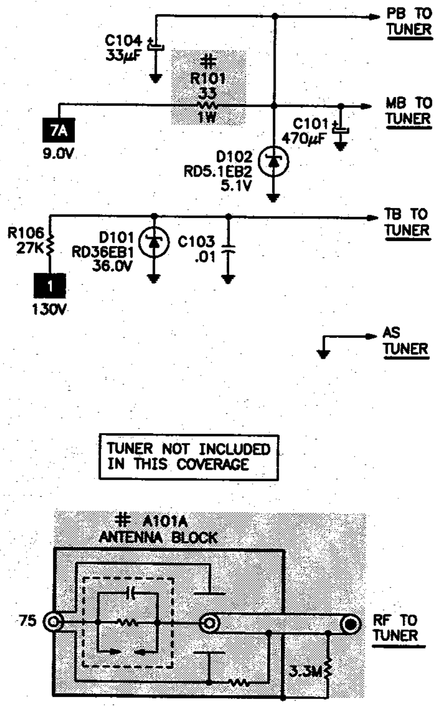

A PHOTOFACT STANDARD NOTATION SCHEMATIC WITH CIRCUITRACE®

© 2000 SAMS Technical Publishing

SCHEMATIC NOTES

- # For SAFETY use only equivalent replacement part, see parts list.
- —x— Circuitry not used in some versions.
- ---- Circuitry used in some versions.
- Ground
- Chassis ground
- Common tie point
- Taken from common tie point
- 3 Schematic CIRCUITRACE® Voltage source tie point.
- A— Cabling: Heavy lines reduce use of multiple lines.

Waveforms and voltages are taken from ground, unless otherwise noted.
Waveforms taken with triggered scope and colorbar signal. Waveform voltage is peak to peak. Timebase is per division. Waveforms shown at 10 divisions.
Supply voltages maintained as seen at input.
Voltages measured with digital meter and a 1000µV RF signal, with colorbar pattern applied to antenna terminal.
Controls adjusted for normal operation.
Capacitors are 50 volts or less, 5% or greater unless noted.
Electrolytic capacitors are 50 volts or less, 20% or greater unless noted.
Resistors are 1/2W or less, 5% or greater unless noted.
Value in ( ) used in some versions.
Measurements with switching as shown unless noted.
Rated voltage shown on zener diodes.

G
POWER SUPPLY SCHEMATIC

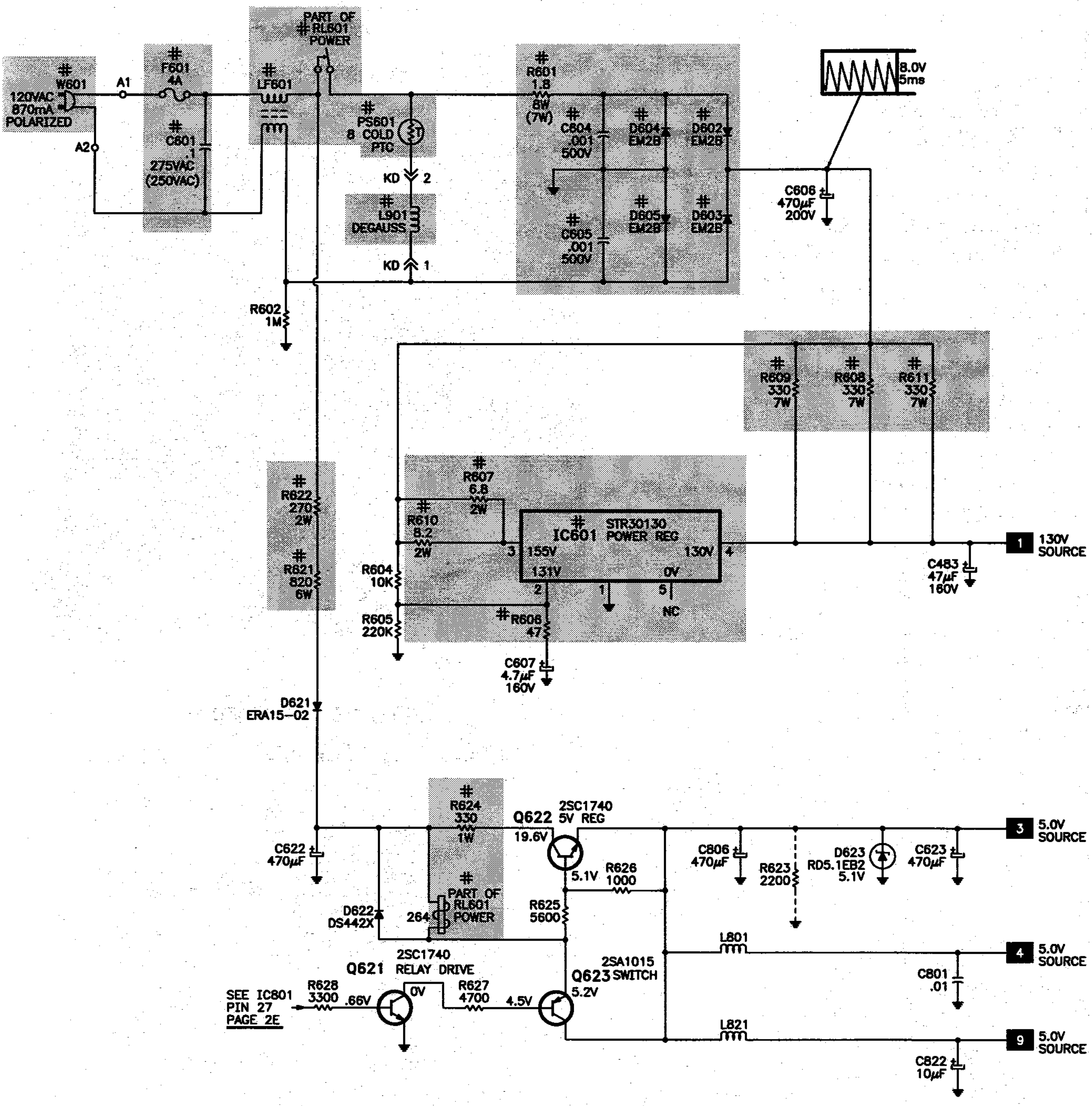

ADDITIONAL SCHEMATIC NOTES, SEE PAGE 2F

A PHOTOFACT STANDARD NOTATION SCHEMATIC WITH CIRCUITRACE®

© 2000 SAMS Technical Publishing

IC FUNCTIONS

IC101
LA76170N

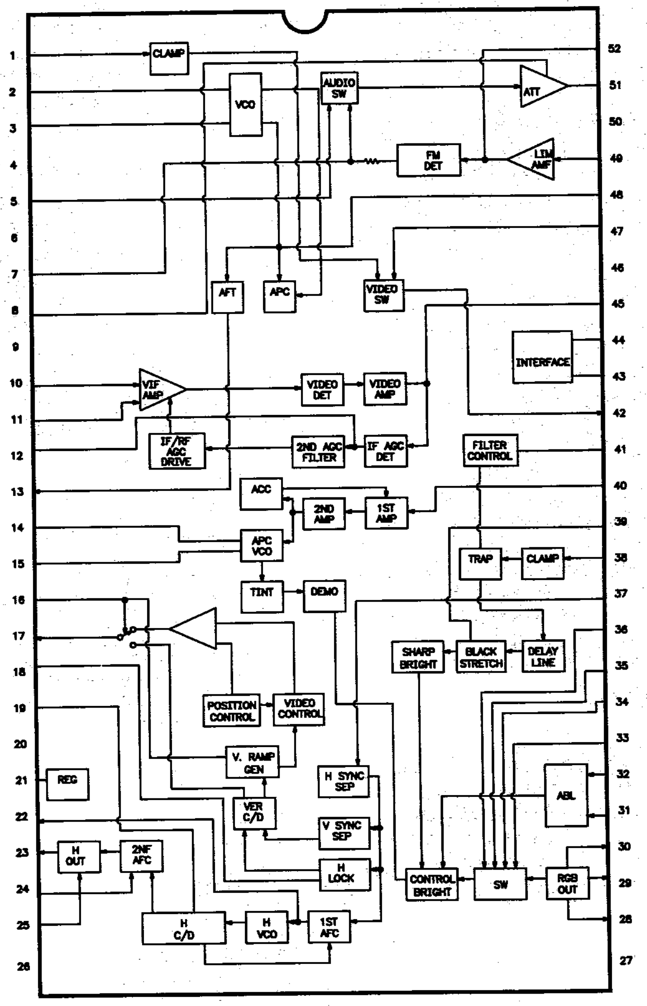

IC601
STR30130

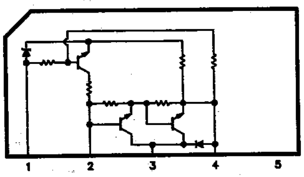

SANYO

MODEL DS25390 (CHASSIS 25390-00)

HIGH VOLTAGE CHECK

Tune in a picture. Set brightness, color, picture, and screen control to minimum. Connect a high voltage probe to CRT anode. High voltage should measure 26kV to 28kV.

ENTERING SERVICE MODE

Disconnect the AC power cord. While pressing the menu button on the front of the set, connect the AC power cord. Use the channel up and down buttons to select the service number. Use volume up and down buttons to change the value.

EXIT SERVICE MODE

To exit service mode, press the menu button.

HORIZONTAL POSITION

Tune in a crosshatch pattern. Enter the service mode and select service number 01. Set the value for the best horizontal centering.

RF AGC DELAY

Tune in a picture. Enter the service mode and select service number 03. Set the value to a point where no snow (noise) appears in picture. Check all channels for proper operation.

VERTICAL SIZE

Tune in a crosshatch pattern. Enter the service mode and select service number 07. Set the value to achieve proper vertical size and best vertical linearity.

VERTICAL CENTERING

Tune in a crosshatch pattern. Check that the pattern is centered. If too low, install resistor R513 (470 ohms, 1W). If too high, install resistor R512 (470 ohms, 1W).

GRAY SCALE

Tune in an active channel. Enter the service mode. Set the value of service numbers 08, 09, and 10 to 0. Set the value of service numbers 11 and 12 to 55. Set screen control, color, brightness, and picture to minimum. Adjust screen control, if necessary, to obtain a barely visible horizontal line. Select service number 41. Adjust the bias levels for a white line. Select service number 40 and adjust the drive values for normal black and white picture at all brightness levels.

SUB BRIGHTNESS

Tune in a color bar pattern. Set picture and brightness to normal. Connect positive lead of a digital voltmeter to TP51 and the negative lead to TP50. Enter the service mode and select service number 25. Adjust value for 520mV ±10mV.

SUB COLOR

Tune in a picture. Set color at center of its range level. Enter the service mode and select service number 26. Set the value to achieve normal color level.

SUB TINT

Tune in a picture. Set tint at center of its range level. Enter the service mode and select service number 27. Set the value to achieve normal flesh tones.

SUB SHARPNESS

Tune in a picture. Set brightness to minimum. Set picture to maximum. Enter the service mode and select service number 28. Set the value to achieve normal contrast range.

OSD HORIZONTAL POSITION

Tune in a local channel. Enter the service mode and select service number 31. Set the value to center the menu on the screen.

SOUND

Tune in a local channel. Confirm that the voltage at pin 50 of IC101 3.85V ± 0.2V, otherwise adjust T131 for 3.85V ± 0.2V.

CONVERGENCE

Operate the receiver for 15 minutes. Connect a color bar generator to the antenna terminals and tune in a dot pattern. Adjust the 4-pole magnet tabs to converge the red and blue dots at the center of the screen. Adjust the 6-pole magnet tabs to converge the red/blue dots over the green dots at the center of the screen.

NOTE: Rotate the two tabs of each set of magnets equally and opposite to converge vertically and rotate both tabs in the same direction to converge horizontally. The 4-pole and 6-pole magnets interact, repeat adjustment until center convergence is correct.

Tune in a crosshatch pattern and remove the rubber wedges between the deflection yoke and the CRT. Tilt the deflection yoke up or down to converge the vertical lines at top and bottom of screen and the horizontal lines at the right and left sides of the screen. Tilt the deflection yoke right or left to converge horizontal lines at top and bottom of screen and the vertical lines at the right and left sides of the screen. Repeat convergence procedure if necessary to obtain best overall convergence. Apply adhesive to wedges and carefully replace on the CRT.

PURITY

Operate the receiver for 15 minutes. Tune in a green raster. Use a degaussing coil to demagnetize the CRT and mounting brackets. Loosen the deflection yoke clamp screw and slide the deflection yoke backward to obtain a vertical green band. Rotate and spread the purity magnet tabs until the green band is centered on the screen. Move the deflection yoke forward to obtain a uniform green screen.

CRT NECK ASSEMBLY

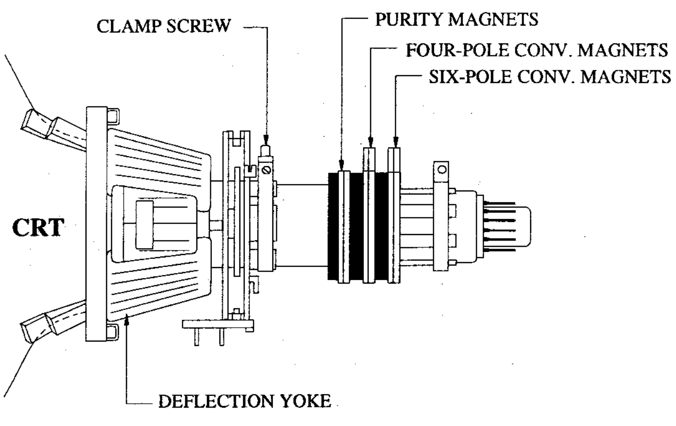

ADJUSTMENTS

IC802 REPLACEMENT

Perform the following adjustments after replacing IC802.

Enter the service mode, select service number 01, and set value to 18. Select service number 13, and set value to 1. Select service number 24 and set value to 0. Select service number 26 and set value to 7. Select service number 27 and set value to 19. Exit service mode.

SERVICE MODE ADJUSTMENT CHART

Service No.	Adjustment	Value Range	Initial Value	On-Set Value	Notes
01	HP	0 - 31	18	18	H-Position (H-Centering)
02	IAS	0, 1	0	0	IF AGC Switch, 0 = TV (Normal), 1 = AV (IF Gain Minimum)
03	RAD	0 - 63	25	40	RF AGC Delay
04	PT	0 - 127	64	73	PLL Tuning
05	ADA	0 - 63	31	30	APC Detect
06	CD	0, 1	0	0	C-Diff
07	VS	0 - 63	32	29	Vertical Size
08	RB	0 - 127	0	15	Red Bias
09	GB	0 - 127	0	17	Green Bias
10	BB	0 - 127	0	0	Blue Bias
11	RD	0 - 127	60	65	Red Drive
12	BD	0 - 127	60	49	Blue Drive
13	TDS	0, 1	1	1	Trap & D (B.P.F.) Switch, 0 = Off, 1 = On
14	AF	0, 1	0	0	Auto Flesh, 0 = Off, 1 = On
15	BS	0, 1	0	0	Black Stretch, 0 = On, 1 = Off
16	VL	0 - 7	4	4	Video Level
17	FL	0 - 31	15	15	FM Level
18	NIS	0, 1	1	1	Black Noise Inverter, 0 = On, 1 = Off
19	ABL	0, 1	1	1	ABL Defeat, 0 = On, 1 = Off
20	WP	0, 1	1	1	White Peak, 0 = On, 1 = Off
21	GD	0 - 15	7	7	Green Drive Reduction
22	VC	0 - 7	0	0	Vert. Comp
23	VD	0 - 63	32	32	Vert. DC
24	AG	0 - 3	3	0	AFC Gain
25	SB	0 - 63	32	34	Sub Brightness
26	SCO	0 - 31	7	5	Sub Color
27	STI	0 - 31	19	19	Sub Tint
28	SSH	0 - 15	8	8	Sub Sharpness
29	OPT	0 - 255	0	0	Option, data 1 should be set to "0", in binary 8 bit 00000000
30	OP2	0 - 255	0	0	Option, data 2 should be set to "0", in binary 8 bit 00000000
31	HR	0 - 63	43	43	OSD H-Position
32	INP	0 - 63	32	32	Input Level
33	STE	0 - 63	32	32	Stereo VCO
34	FIL	0 - 63	63	63	Filter
35	LSP	0 - 63	32	32	Low Separation
36	HSP	0 - 63	32	32	High Separation
37	SPV	0 - 63	32	32	SAP VCO
38	PCO	0 - 63	32	32	PIP Color
39	PTI	0 - 63	32	32	PIP Tint
40	DRV	0 - 127	60	65	Red Drive, press 1 to decrease value and 3 to increase value
	DRV	0 - 127	60	49	Blue Drive, press 7 to decrease value and 9 to increase value
41	-	0 - 127	0	-	Red Bias, press 1 to decrease value and 3 to increase value
	-	0 - 127	0	-	Green Bias, press 4 to decrease value and 6 to increase value
	-	0 - 127	0	-	Blue Bias, press 7 to decrease value and 9 to increase value

TUNER INFORMATION

TUNER VOLTAGE CHART

Pin	VHF Low Band	VHF High Band	UHF Band
AGC	2.5V	2.2V	2.2V
AS	0V	0V	0V
SCL	4.5V	4.5V	4.5V
SDA	4.4V	4.4V	4.4V
MB	5.0V	5.0V	5.0V
PB	5.0V	5.0V	5.0V
TB	33.7V	33.7V	33.7V
IF	0V	0V	0V

NOTE: VHF Low Band voltages taken on channel 2.
VHF High Band voltages taken on channel 7.
UHF Band voltages taken on channel 14.
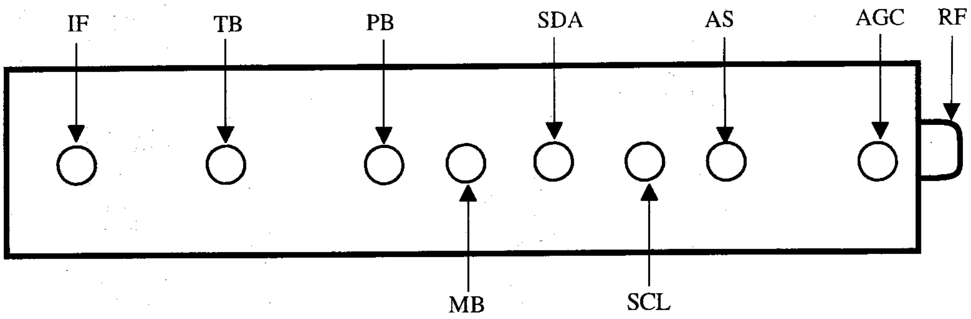
TUNER TERMINAL GUIDE